DIMNS MARKED DENOTES (S) SAFETY/REGULATION (F) CRITICAL FIT/FUNCTION (M) MAJOR FIT/FUNCTION (M2) MINOR FIT/FUNCTION

DIM'A'	∅'C'	∅'B'	BEFORE POST CHROME GRINDING PLATING THICKNESS	FINISH GRIND∅	AFTER POST (M) CHROME GRINDING PLATING THICKNESS
174.4	∅10.960−10.986	134.4	18±4 μm	∅10.938−10.948	15±4μm

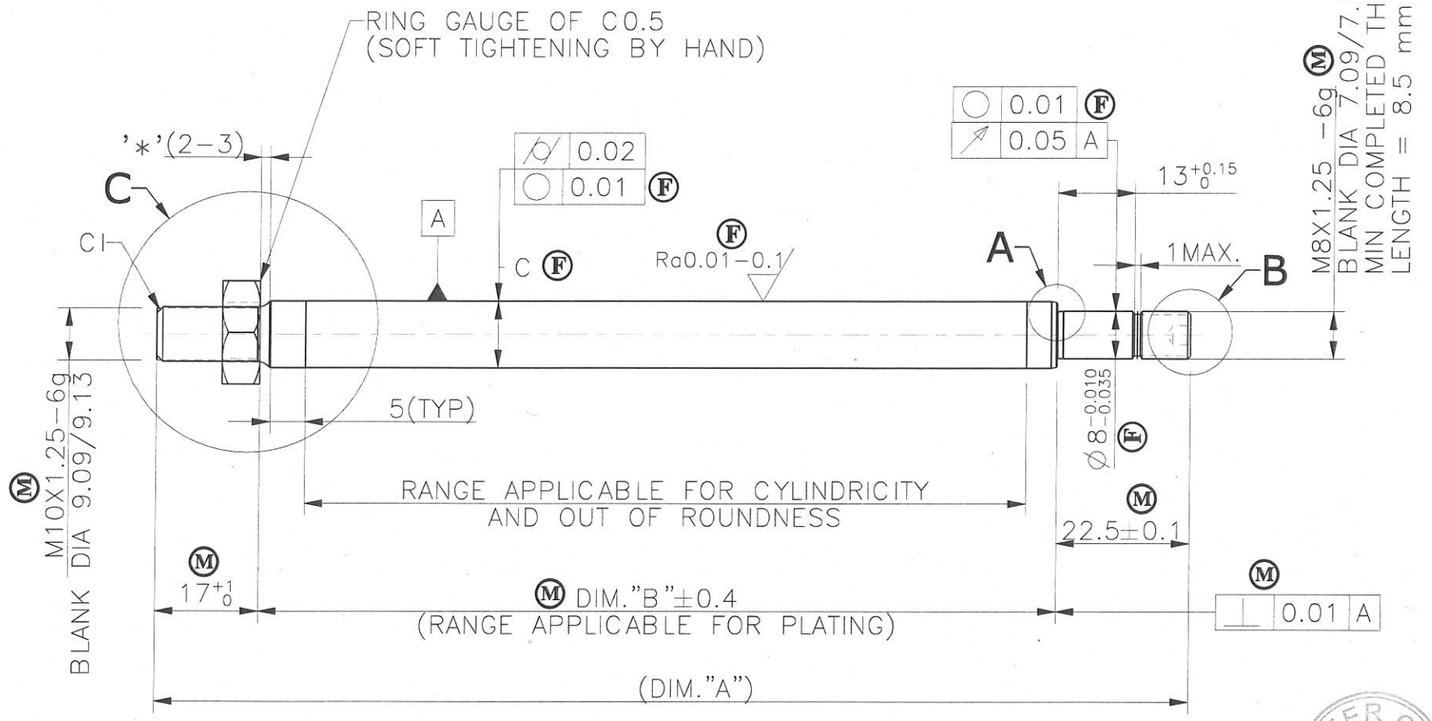

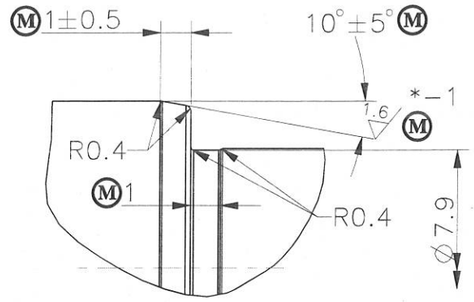

DETAIL A(5:1)

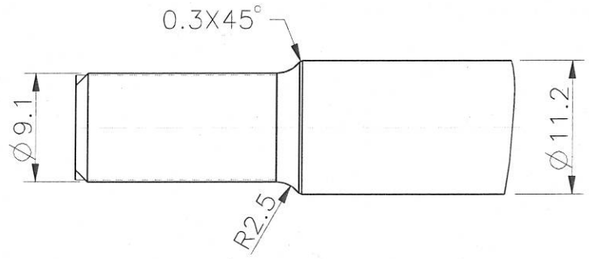

DETAIL C
PROFILE AT MACHINING STAGE

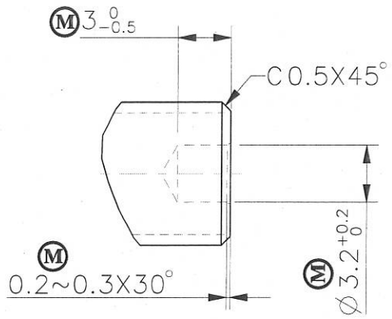

DETAIL B(3:1)

MASTER COPY ONLY IF RED

NOTES:

1. TO BE GROUND TO FINISH SIZE AFTER PLATING. MATERIAL REMOVAL 3~5μ ON DIAMETER.
(M) 2. MUST BE NO CHATTER, SCRATCH, ABRASION AND BRUISE ON SURFACE OF ∅11.
(M) 3. MUST BE FREE FROM PINHOLE, ROUGH SURFACE AND BLISTER AFTER PLATING.
4. PARTING PIP NOT PERMITTED.
(F) 5a. CORROSION RESISTANCE TEST : UP TO 24Hrs CASS TEST, RATING NO.9 MIN.
5b. PLATING VALIDATION : CORROSION TEST AS MENTIONED, OTHER PARAMETERS AS PER GSP0103.
6. '*' MARKED DIMENSION IS FOR THREAD ROLLING RELIEF ON RADIUS R2.5.
(M) 7. CHROME HARDNESS : HV 800 Min/50 gms LOAD.
8. '*'−1 MARKED SURFACE FREE FROM RING MARKS/NAIL FEEL MARK TO BE VERIFIED VISUALLY.

DATE	REV	ALTERATION	E.C.N.NO
31.05.19	00	MASS PRODUCTION RELEASED	451−17
11.03.19	A6	PRE PRODUCTION RELEASED,NOTE 8 ADDED, R0.4 WAS R0.2,DIM. 174.4 WAS 174, 134.4 WAS 134,Rz & 1b REMOVED.	451−15
27.07.18	A5	DIM Ø8 TOL −0.010/−0.035 WAS TOL −0.06/−0.09, DIM 13 WAS 12.2, DIM 174 WAS 173.5.	451−09
26.06.18	A4	DIM 173.5 ,136.5 WAS 176,134	451−07
30.03.18	A3	RELEASE FOR OTS	451−03

SUPERSEDES : A2
GENERAL TOLERANCE ASPER : −
DESIGN SOURCE REF.
RELEASE FOR: ☐ COSTING ☐ PROTOTYPE ☐ OTS ☐ PRE−PRODUCTION ■ PRODUCTION

GABRIEL INDIA LTD.

SCALE	SHEETS	FINISH:	MASS:
1:1	1 / 1	HARD CHROME PLATING	121.9 g

DRAWN BY MADHU Madhu
DATE: 31.05.19
CHECKED BY VRISHALI Vrishali
DATE: 31.05.19
APPROVED BY DIWAKAR
DATE: 31.05.19

NAME:− PISTON ROD
MATERIAL:− BAR 3404010-AS PER GIL SPEC-GP136-5
PART NO:− 114040105
REV. 00

ALL DIMENSIONS ARE IN MM. | NO MANUAL ALTERATION | DO NOT SCALE | IF IN DOUBT PLEASE ASK | SIZE : A3

J1A & J1B RCU

CONFIDENTIAL: THIS DRAWING AND THE INFORMATION THEREIN ARE THE PROPERTY OF GABRIEL INDIA LTD., AND SHALL NOT BE REPRODUCED, COPIED RECORDED IN ANY MEDIA, USED FOR ANY OTHER PURPOSE OR DELIVERED AND/OR DISCLOSED TO ANY THIRD PARTY WITHOUT WRITTEN CONSENT OF GABRIEL.